Samotics

Smart Asset Monitoring SAM4.

MV

MEDIUM VOLTAGE APPENDIX.

For the condition monitoring of medium voltage assets, the SAM4 hardware uses existing current and voltage transformers. The installation of the SAM4 hardware takes place in the low-voltage compartment, measuring the secondary current and voltage of the transformers.

Make sure that for both the current and voltage a 3-phase output is available.

Please note that this document is an appendix of the installation manual, indicating which installation steps differ from a low-voltage installation.

4. WIRING DIAGRAM

For medium voltage assets, the SAM4 measurement take place in a low-voltage compartment. This is created by using voltage and current transformers that transform the current and voltage to lower values. Therefore the sensors are not directly placed on the phase wires running to the motor, but on the secondary side of the transformers.

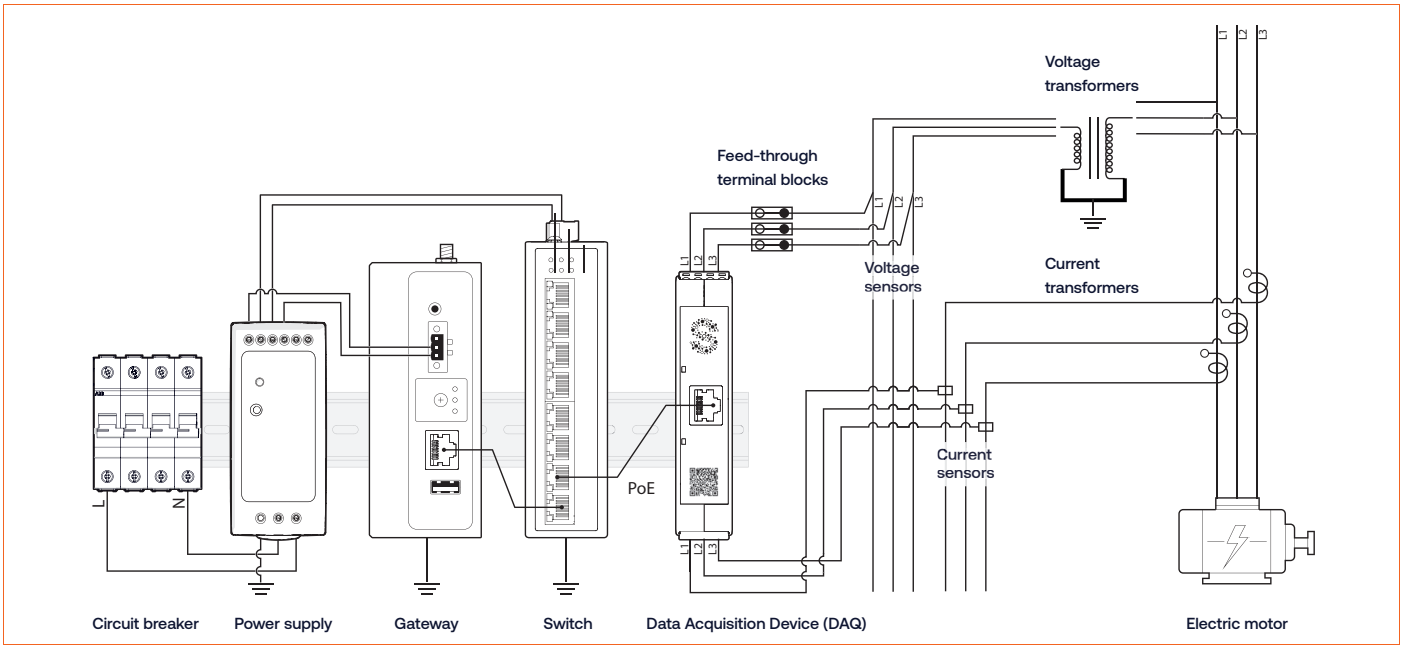

5.1. CURRENT SENSORS

For a medium voltage installation, the ID0 clamp is used. Please note that this clamp is also used in low voltage situations. Because the measurements for medium voltage assets take place at the secondary side of the transformer, the amperage ranges as mentioned for low voltage are not applicable.

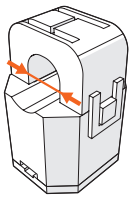

8.1. CONNECTING THE CURRENT SENSORS

To measure current for medium voltage assets the SAM4 hardware uses existing current transformers. Based on the functionality of the transformers, the secondary current may differ. The transformer output is either 1 or 5 amps which creates two connection options.

Please note that the arrow of the clamps needs to be directed towards S2.

Option 1: 1A output - To increase the resolution, feed the phase wire 5 times through the clamps.	Option 2: 5A output - Place the clamps around the phase wires in the low voltage compartment.
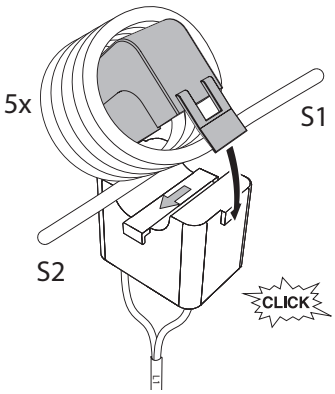	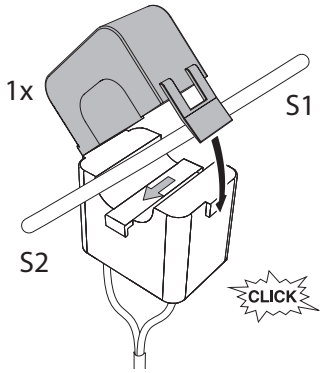

8.2. VOLTAGE CONNECTION OPTIONS

For measuring voltage there are two options. Either the motor has a dedicated voltage transformer where the voltage will be measured or there will be a centralized transformer for multiple assets.

Option 1: Transformer dedicated to the specific motor used.

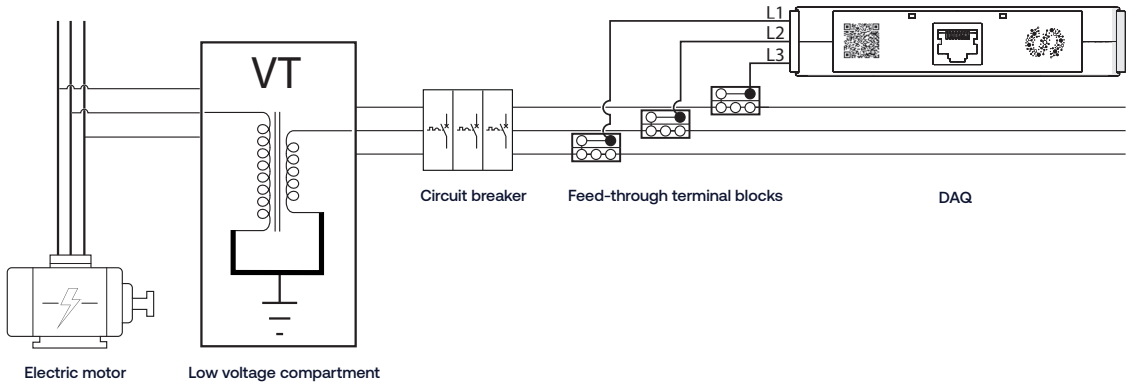
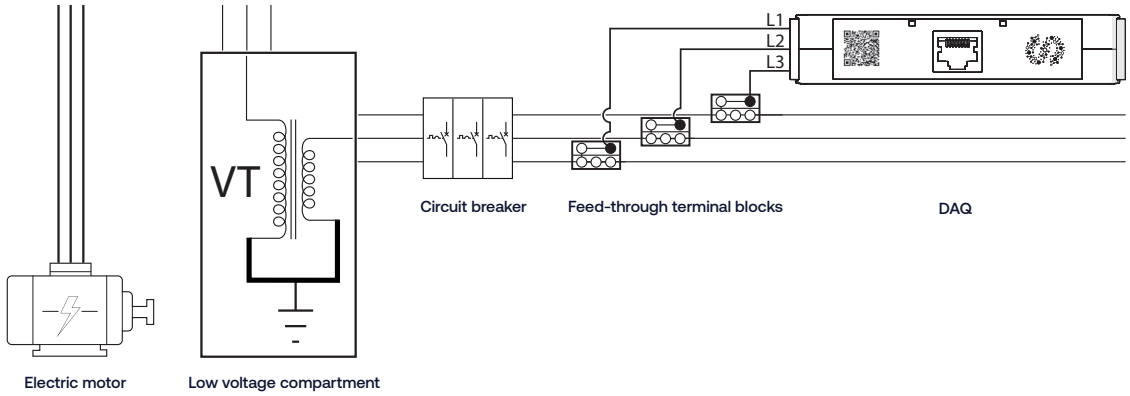
Option 2: Central transformer in the room used.